Working with multiplexers

Submitted by:

Name	ID
Nawaf Alabdi	B00093759
Ali Abdelatief	B00099836

Submitted to:

Ms. Salsabeel Shapsough

Lab Instructor

American University of Sharjah

College of Engineering

Submitted on:

11/11/2024

Abstract

In this lab we will be using 8:1 and 4:1 multiplexers to build two 4-input Boolean functions, then build a comparator circuit from basic logic gates.

Introduction

In this lab, we will go over multiplexers and how they can be used to create logic circuits with specific desirable outputs. We will use one 8:1 multiplexer to build a circuit with 4 inputs, and a 4:1 multiplexer to build a different circuit with 4 inputs as well. These two cases are situations where we have more inputs than the multiplexer can take. Finally, we will design a circuit that compares two 4-bit unsigned binary numbers (a and b) and give one of three outputs depending on whether a=b, a>b or a<b.

Theoretical Background

The 2^n:1 multiplexer is a complex circuit chip that has 2^n data inputs ($I_{(2^n)}$, $I_{(2^{n-1})}$, … , I_0) along with n selection lines (s_n, s_{n-1},…, s_1) and one output. The output of a given multiplexer equals to the data input at the position of the decimal value formed by the selection lines. In that sense, the selection lines "select" which data input the output is connected. Formally, for any given multiplexer as described above, we can find the output F using the formula

F = $\sum m_i * I_i$, where i goes ¿ $i=0$ ¿ 2^n-1

In electronics, the multiplexers were implemented in the form of chips numbered 74151 (8:1 MUX), and 74153 (two 4:1 MUXs) with the following data sheet.

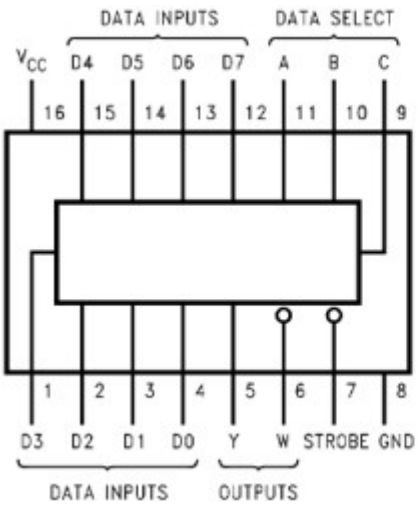

Inputs				Outputs	
Select			Strobe	Y	W
C	B	A	S		
X	X	X	H	L	H
L	L	L	L	D0	$\overline{D0}$
L	L	H	L	D1	$\overline{D1}$
L	H	L	L	D2	$\overline{D2}$
L	H	H	L	D3	$\overline{D3}$
H	L	L	L	D4	$\overline{D4}$
H	L	H	L	D5	$\overline{D5}$
H	H	L	L	D6	$\overline{D6}$
H	H	H	L	D7	$\overline{D7}$

H = High Level, L = Low Level, X = Don't Care
D0, D1...D7 = the level of the respective D input

Connection Diagram

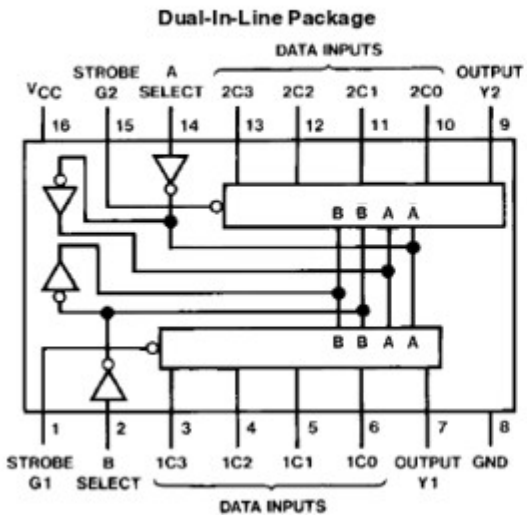

Function Table

Select Inputs		Data Inputs				Strobe	Output
B	A	C0	C1	C2	C3	G	Y
X	X	X	X	X	X	H	L
L	L	L	X	X	X	L	L
L	L	H	X	X	X	L	H
L	H	X	L	X	X	L	L
L	H	X	H	X	X	L	H
H	L	X	X	L	X	L	L
H	L	X	X	H	X	L	H
H	H	X	X	X	L	L	L
H	H	X	X	X	H	L	H

Select inputs A and B are common to both sections.
H = High Level, L = Low Level, X = Don't Care

A comparator is a circuit that takes in 2n inputs, where the first n inputs represent the value of a given number B, and the remaining n inputs represent the value of a given number A and

returns a Boolean statement about the ordering of those numbers. In our case, we worked with comparators that flag whether A > B, A = B, or A < B.

Electronically, we can determine whether a given number A > B by comparing the digits from left (MSB) to right. If the MSB of A is greater than B (i.e. MSB of A is 1 while B's is 0), then A > B returns one. Otherwise if the first n MSBs of A and B are equal AND A's NEXT most significant bit is greater than B, A > B returns one.

For A = B, we simply check whether all of A's and B's bits are the same using XNOR gates to return the truth value. As for A < B, we simply combine both NOT(A > B) AND NOT (A = B).

Please refer to the Q3 for the general formula of these comparators.

Experimental work, Results and Discussion

Exercise 1:
Design the following Boolean function using 74151 multiplexer and use LogiSim Evolution to simulate the circuit of question 1 using 74151 and necessary logic gate(s):

$$F_{(A, B, C, D)} = \sum (0, 4, 5, 7, 8, 9, 12, 15)$$

Enable	Select Lines			**Output**
OE	S_2	S_1	S_0	Y
1	X	X	X	0
0	0	0	0	A
0	0	0	1	B
0	0	1	0	C
0	0	1	1	D
0	1	0	0	E
0	1	0	1	F
0	1	1	0	G
0	1	1	1	J

Table (1)

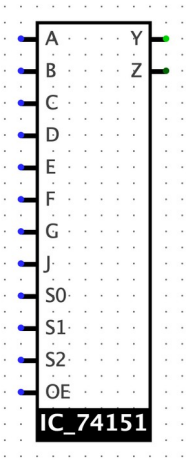

A (S2)	**B (S1)**	**C (S0)**	**D**	**F(A,B,C,D)**
0	**0**	**0**	**0**	**1** f(0,0,0) = $\overline{D}$
0	**0**	**0**	**1**	**0**
0	**0**	**1**	**0**	**0** f(0,0,1) = 0
0	**0**	**1**	**1**	**0**
0	**1**	**0**	**0**	**1** f(0,1,0) = 1
0	**1**	**0**	**1**	**1**
0	**1**	**1**	**0**	**0** f(0,1,1) = D
0	**1**	**1**	**1**	**1**
1	**0**	**0**	**0**	**1** f(1,0,0) = 1
1	**0**	**0**	**1**	**1**
1	**0**	**1**	**0**	(1,0,1) = 0
1	**0**	**1**	**1**	**0**
1	**1**	**0**	**0**	**1** f(1,1,0) = $\overline{D}$
1	**1**	**0**	**1**	**0**
1	**1**	**1**	**0**	**0** f(1,1,1) = D
1	**1**	**1**	**1**	**1**

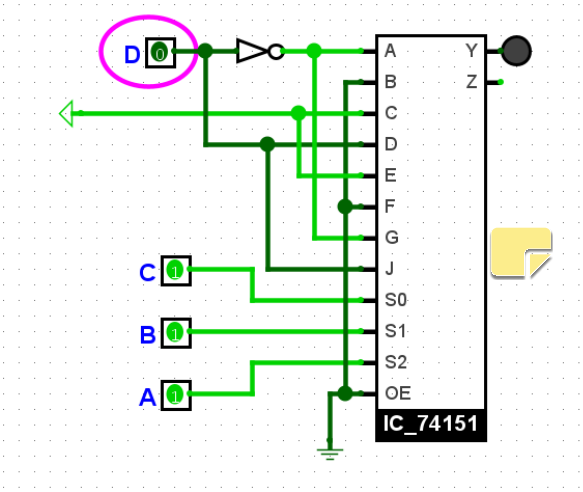

Exercise 2:

Implement the function below using a 4-to-1 MUX and any necessary logic. Draw the circuit diagram, indicate all available pins on the 74153 chip, and how they must be connected. Then use LogiSim Evolution to simulate the circuit.

$$F(A, B, C, D) = \sum (0, 1, 4, 5, 7, 8, 12)$$

Don't care = d (2, 3)

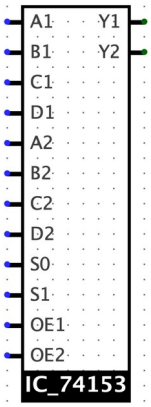

A	B	C	D	F
0	0	0	0	1 F(0,0) = 1
0	0	0	1	1
0	0	1	0	x
0	0	1	1	x
0	1	0	0	1 F(0,1) = $\overline{C}$ + D
0	1	0	1	1
0	1	1	0	0
0	1	1	1	1
1	0	0	0	1 F(1,0) = $\overline{(C+D)}$
1	0	0	1	0
1	0	1	0	0
1	0	1	1	0

1	1	0	0	1 F(1,1) = $\overline{(C+D)}$
1	1	0	1	0
1	1	1	0	0
1	1	1	1	0

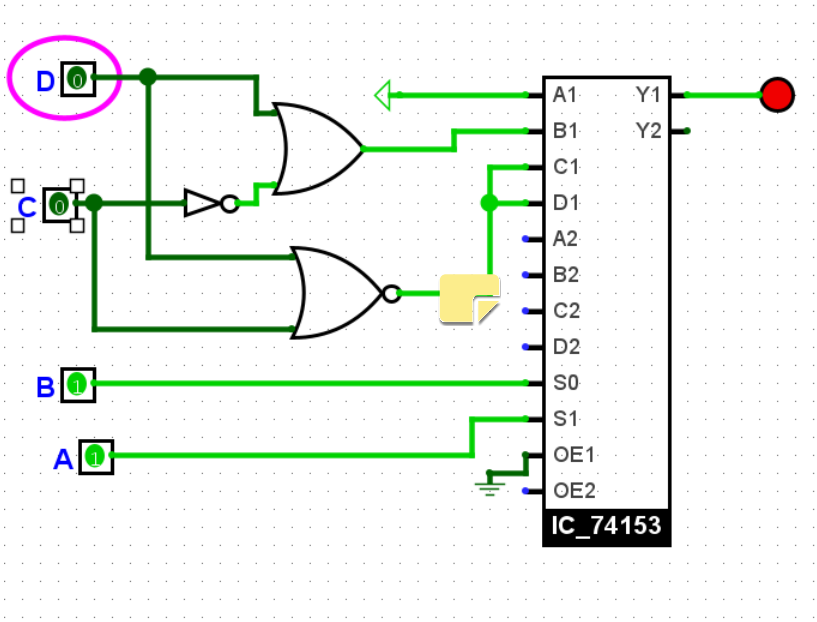

Exercise 3:

Design a 4-bit unsigned number comparator with 3 outputs:

- O(a=b): true if a=b and false otherwise
- O(a>b): true if a>b and false otherwise
- O(a<b): true if a<b and false otherwise

1. Show your design steps

$a = a_3\ a_2\ a_1\ a_0$ (4 bits)

$b = b_3\ b_2\ b_1\ b_0$

XNOR

Let X_3 be if $a_3 = b_3$. $X_3 = a_3 b_3 + \bar{a}_3 \bar{b}_3 = a_3 \odot b_3$

Similarly, $X_2 = a_2 \odot b_2$, $X_1 = a_1 \odot b_1$, $X_0 = a_0 \odot b_0$

$$O_{a=b} = \begin{cases} 1, & X_3 \cdot X_2 \cdot X_1 \cdot X_0 \\ 0, & \text{otherwise} \end{cases}$$

$$O_{a>b} = \begin{cases} a_3 \cdot \bar{b}_3 + X_3 \cdot a_2 \cdot \bar{b}_2 + X_3 \cdot X_2 \cdot a_1 \cdot \bar{b}_1 + X_3 \cdot X_2 \cdot X_1 \cdot a_0 \cdot \bar{b}_0 \\ 0, & \text{otherwise} \end{cases}$$

$$O_{a<b} = \begin{cases} 1, & \bar{a}_3 b_3 + X_3 \cdot \bar{a}_2 \cdot b_2 + X_3 \cdot X_2 \cdot \bar{a}_1 \cdot b_1 + X_3 \cdot X_2 \cdot X_1 \cdot \bar{a}_0 \cdot b_0 \end{cases}$$

We define X_i as a_i XNOR b_i, this logical statement asserts that both digits rae the same.

2. Implement and test your final circuit in LogiSim

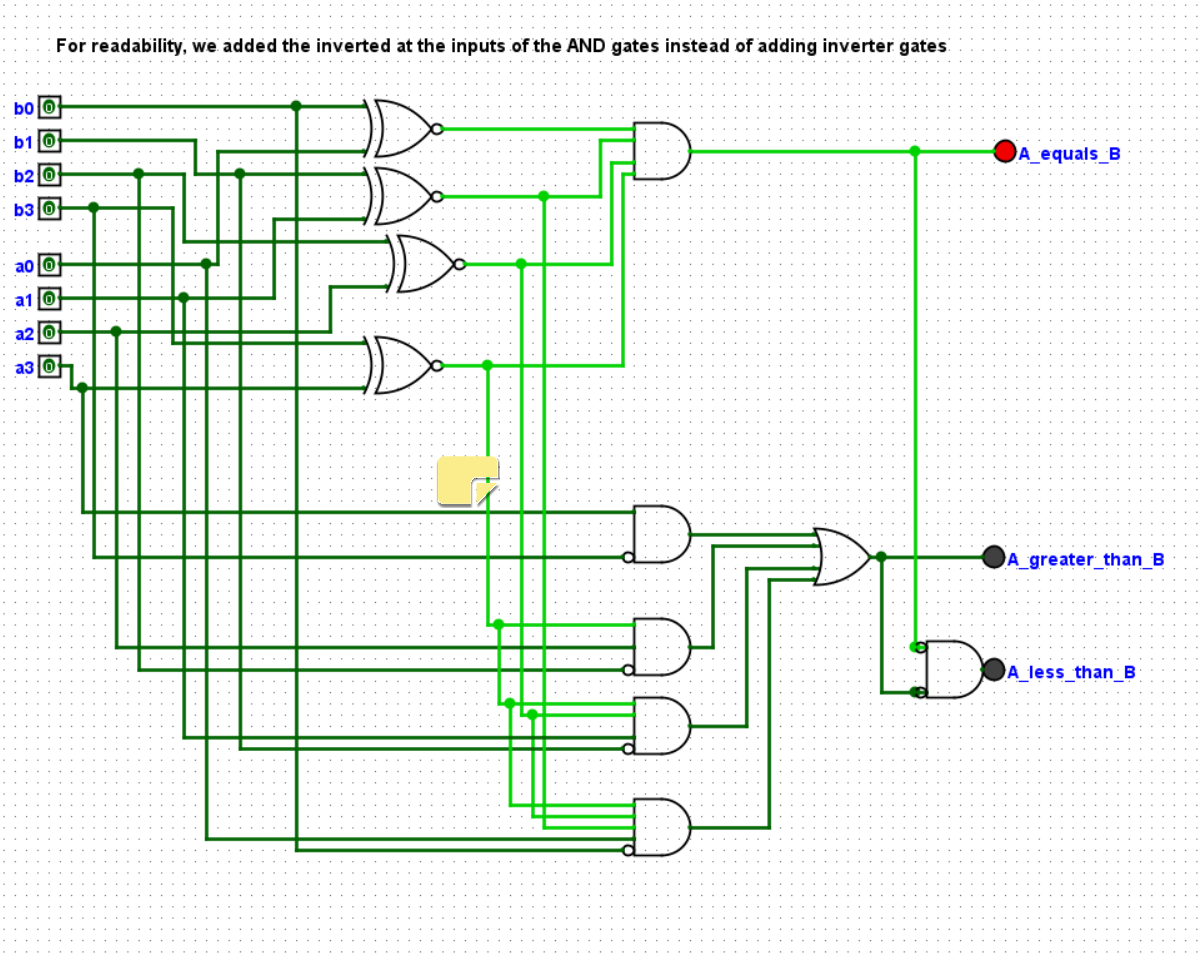
For readability, we added the inverted at the inputs of the AND gates instead of adding inverter gates
b0
b1
b2
b3
a0
a1
a2
a3
A_equals_B
A_greater_than_B
A_less_than_B

Conclusion

In this lab, we went over multiplexers and how they can be used to design and build logic circuits with specific outputs, as well as designing a 4-bit unsigned number comparator that gives one of three outputs indicating which number larger than the other, or if they are both equal.